Elite Sheet Piling Ltd

Movax Side Grip Specialists

SoilTek S80

Specification Data Sheet

Elite Sheet Piling Ltd, Clough Street, Stoke-on-Trent, ST1 4AS

Tel: 0871 915 3775 **Mob**: 07891554088 **Email**: info@elitesheetpiling.com **Web**: www.elitesheetpiling.com

Elite Sheet Piling Ltd is a registered limited Company in England and Wales. Company No: 07869902.

Elite Sheet Piling Ltd

Movax Side Grip Specialists

Specification

- Mast Length + Kelly Bar - 16.810m
- Kelly Bar – 4.700m
- Auger length 6.0m + 2.5m
- Auger dia 450mm & 600mm
- Rear and Side View Camera
- 600mm Shoe width
- Width – 2.500m – 3.500m
- Track Length – 3.480m
- Pekins Tier 4
- Total Weight – 21,000kg
- Bio-degradable hydraulic Oil
- Rotary: RT 80 – 8t Torque
- 150mm 4” Hex Couplings
- Guides – 600mm, 450mm & 350mm
- Max drill depth: 12.5m
- 4” concrete pipework
- Seat Belt green light
- NDT Data Cloud

Elite Sheet Piling Ltd
Movax Side Grip Specialists

Technical Data

Specification	
Engine:	Perkins Tier 4
Power:	144—106 Hp-Kw
Maximum Depth:	12m
Maximum Diameter:	600mm
Total Machine Weight:	20t
Main Winch	
Nominal line-pull:	85kN
Rope Diameter:	18mm
Max Line Speed:	60m/min
Service Winch	
Nominal line-pull:	25kN
Rope Diameter:	14mm
Max Line Speed:	45m/min
Rotary	
Type:	RT80
Nominal torque:	88.00 kNm
Max drilling speed:	4—24 RPM

Elite Sheet Piling Ltd

Movax Side Grip Specialists
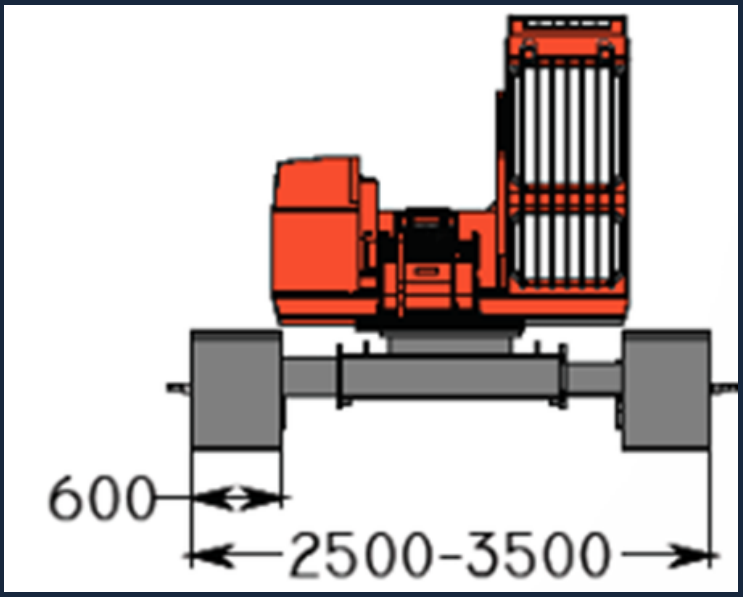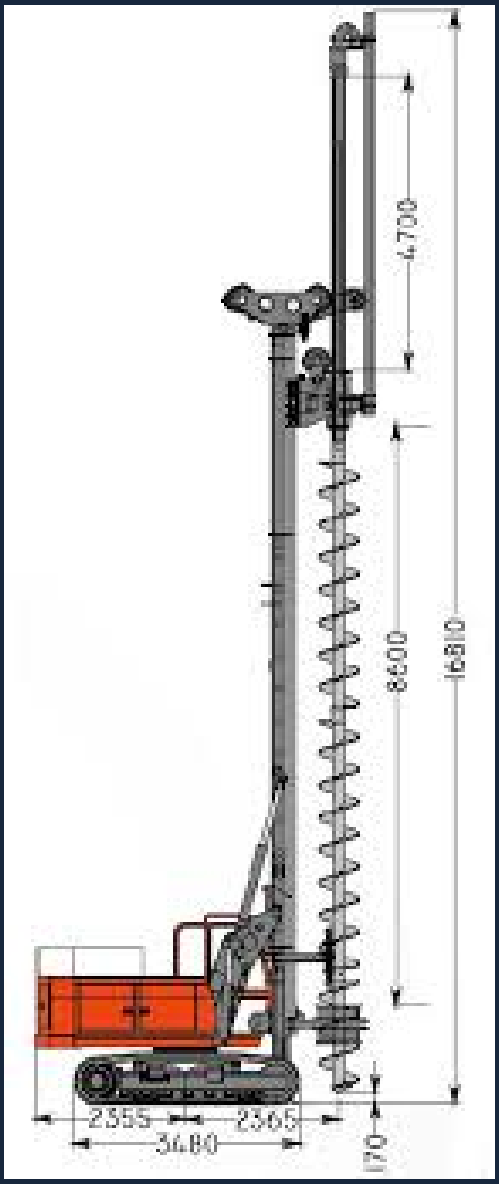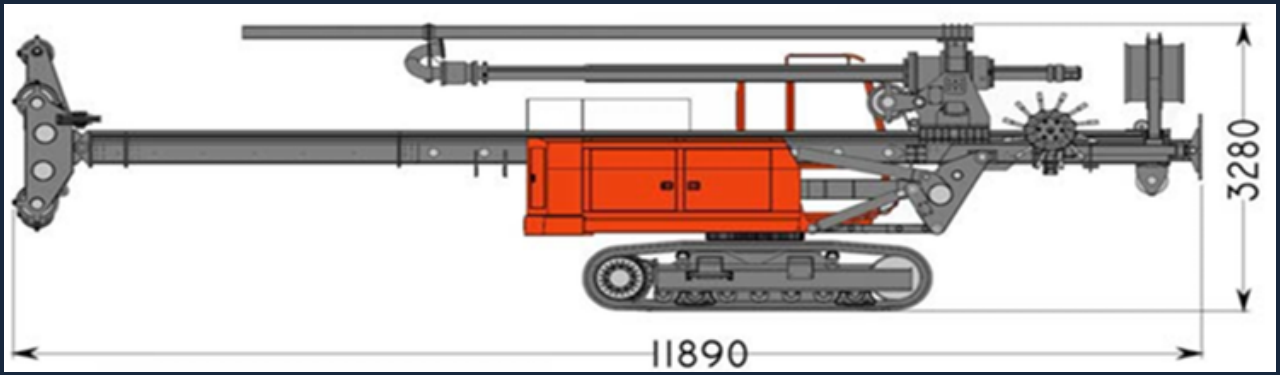
Working Range & Dimentions